Optimal Tuning of PID Controllers for Generation Control of HVDC Link Interconnected Power System

Gurjit Singh[1], Vipandeep Kaur Dutta[2]

[1,2]Asst. Professor, Department of Electrical Engineering, IET Bhaddal, Ropar, Punjab

Abstract

Interconnections of power systems enable taking advantage of diversity of loads, availability of sources and fuel price in order to supply electricity to the loads at minimum cost with a required reliability. But with interconnections, the power system becomes increasingly complex to operate and the system can become less secure for riding through the major outages. System frequency and system voltage profile matching is the main concern in an interconnected power system. With interconnections, variations in system frequency and voltage increase which may lead to large dynamic swings between different parts of the system. In this paper, the Automatic Generation Control of two interconnected control area power system, with parallel HVDC links for each control area, is modeled as a closed loop control system problem. A step input signal is applied to the closed loop control system to correlate the changes in system load during operation of the power system. The variations in system frequency and voltage are reduced with Proportional Integral Derivative (PID) controllers. These controllers are very widely used for closed loop control systems; however, the tuning of these controllers is difficult. With proper selection of PID controller gains, the dynamic performance of the system is improved and with HVDC links for interconnection, the system stability and tie line deviations are maintained.

Key Words: Automatic Generation Control, Automatic Voltage Regulation, HVDC Link, Load Frequency Control, Non-Reheat Turbines, PID Controller, Tie line Control.

1. INTRODUCTION

In a power system, the electrical generation and load must balance at all times. To some extent, the electrical power system is self-regulating or self-balancing in nature. If generation is less than load, the voltage and frequency of the system drops, and thereby the load goes down to equal the generation minus the losses. However, such self-regulation is of very small margin and goes unnoticed. If the generation does not match the load and losses, then there can be serious outages in various control areas of the power system. To prevent this, Automatic Generation Control (AGC) is provided in a power system to match the electrical generation with the continuously varying system load [1]. In an interconnected power system, when adequate generation is available, real power flows from the surplus generation areas to the deficit areas, and it flows through all parallel paths available. Often, long distances are involved with loads and generators along the way. An example relevant to the Indian power system structure is that of the power scheduled from Champa (in Bihar) to Kurukshetra (in Haryana) via the UHVDC line of ±800 kV and covering a distance of 1350 km. With HVDC, power flows as ordered by the operator, because with HVDC power electronics converters power is electronically controlled. Because of this, the HVDC line can be used to its full thermal capacity if adequate converter capacity is

provided [2]. As the electrical utilities in India are starting to adopt the concept of restructured power system there is emerging trend towards electricity spot marketing and due to development of HVDC transmission line corridors across India, the role of asynchronous tie lines i.e., parallel HVAC and HVDC lines, would be quite important in the future interconnected power system [3]. In this paper, AGC of two interconnected control area power system with asynchronous tie lines is modelled as a closed loop control system. A step input is applied to the closed loop control system to correlate the changes in system load during operation of the power system. The dynamic performance of the system is then improved by tuning of PID controller.

2. AUTOMATIC GENERATION CONTROL

Automatic generation control is provided in almost every power system to stabilize the disturbance in system frequency and voltage. The basic principle behind the frequency and voltage control is that system frequency is dependent on the real power at the generation end and voltage is dependent on the reactive power available at the generation end. By controlling the real and reactive power generated, the system frequency and voltage can be maintained within limits. Load Frequency Control (LFC) and Automatic Voltage Regulation (AVR) are important control loops of an AGC system that facilitates the function of control the real and reactive power, respectively. The LFC and AVR control loops are designed to operate around normal state with small variable excursions. The loops may therefore be modelled with linear, constant coefficient differential equations and represented with linear transfer functions [4].

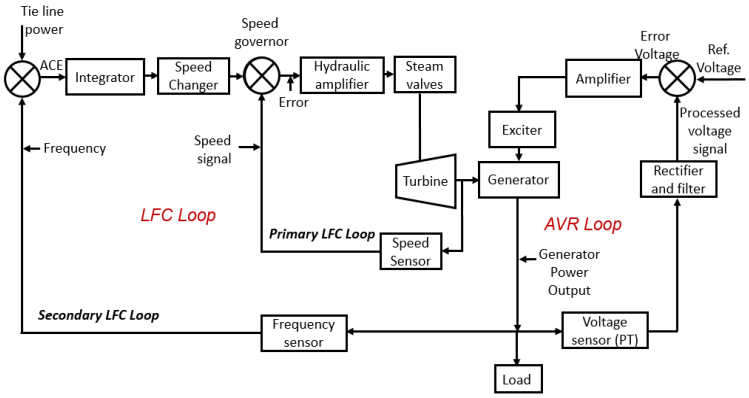

Fig. 1 Block Diagram of AGC

2.1 Automatic Voltage Regulation

Automatic voltage regulation is done within the generator. The voltage at the output terminals of the generator is sensed by a voltage sensor, this sensor provides control signals to the excitation system of the synchronous generator. The excitation system further controls the field excitation of the generator and thus regulates the voltage generated by the synchronous generator [5].

2.2 Load Frequency Control

Load frequency control is done by controlling the input steam to the turbine system. The primary LFC loop senses the turbine speed and controls the operation of the control valves of turbine power input via the speed governor. This loop is relatively faster than the secondary LFC loop which senses the electrical frequency of the generator output and maintains proper power

interchange with the interconnections. This loop is slower in response and is insensitive to rapid load and frequency changes. Usually, the primary LFC loop operates in order of seconds while secondary LFC loop operates in order of minutes [6].

3. CONTROL STRATEGY AND CONTROLLER.

In this study, the uncontrolled system is subjected to a steady state error for a step load change, and to reduce this steady state error, a negative feedback signal from the frequency deviation is introduced. PID controller is used for improving both the transient and steady state performances. The controllers are applied separately to the LFC loop and the AVR loop of the system. A PID controller with its three term functionality covering treatment to both transient and steady state responses offers the simplest yet most efficient solution to many real world control problems [7]. The transfer function of a standard PID controller is given by

$$G(s) = K_P + K_I \frac{1}{s} + K_D s \tag{1}$$

3.1 Conventional Trial and Error Tuning of PID Controller

The tuning of the controller can be achieved with the following three steps [8]:

Step 1: Set K_D and K_I to zero. By trial and error select K_P that results in a stable oscillatory performance. In case of multi input system, select K_P that results near to critical damping.

Step 2: Vary K_D with K_P fixed so as to reduce the oscillations and result in reasonable overshoot and settling time.

Step 3: Till here the transients are taken care of. For the steady state performance vary K_I with K_P and K_D fixed such that there is zero steady state error in minimum time.

4. SYSTEM INVESTIGATED

The system considered in this study is a two control area interconnected power system, each area consisting of a thermal generating unit of non-reheat type. Both the control areas are interconnected via asynchronous tie lines. The transmission lines considered are long transmission lines of length greater than the breakeven distance of HVAC and HVDC lines.
The system was observed under a 0.1875 p.u. step load perturbation in the first area. The simulation time was set to 50 sec. Both the control areas considered here have similar parameters. Typical simulation parameters for running the system are mentioned in Table 2.

The dynamic performance of the system was measured in terms of the following system parameters: Δf_1, Δf_2 (frequency deviation in Area 1 & Area 2), ΔACE_1, ΔACE_2, (area control error in Area 1 & Area 2), ΔP_{TIE} (change in tie line power flow), ΔV_1, ΔV_2 (voltage deviation in Area 1 & Area 2) [3] [9] [10]. The closed loop control system model of the power system is shown in Fig. 2.

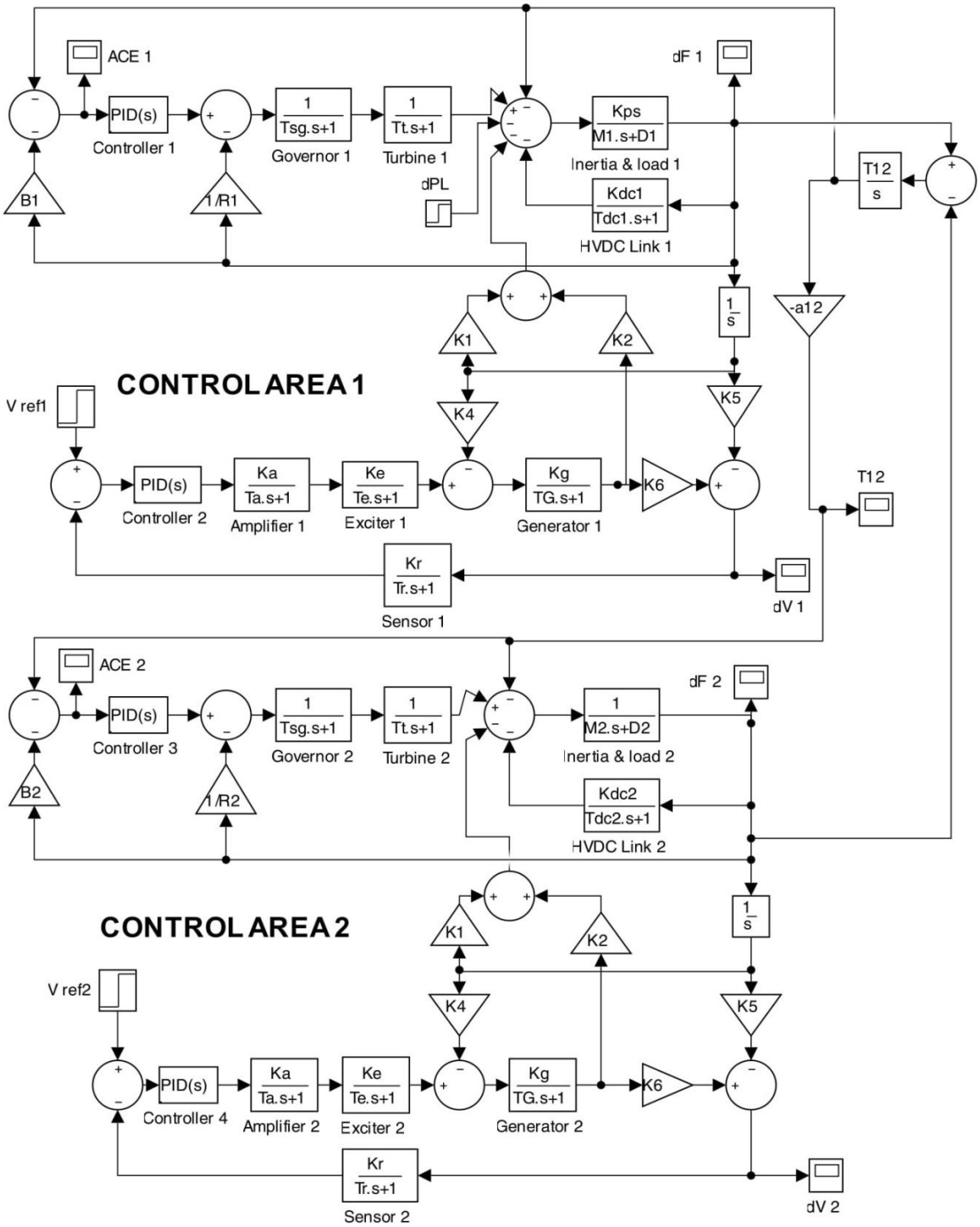

Fig. 2 System Investigated

5. SIMULATION RESULTS

The area control error deviations are shown in Fig. 3, the frequency deviations are shown in Fig. 4, and the change in tie line power flow from Area 1 to Area 2 is shown in Fig. 5. The terminal voltage response for Area 1 and Area 2 is shown in Fig. 6 and Fig. 7 respectively. The PID controller gains observed for the system are tabulated in Table 1.

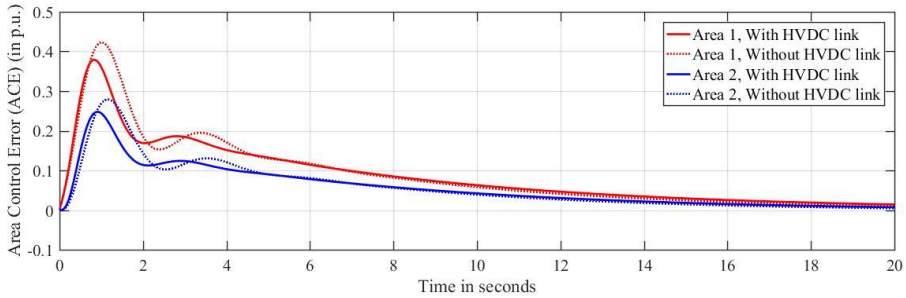

Fig. 3 Change in Area Control Error - ΔACE_1 and ΔACE_2

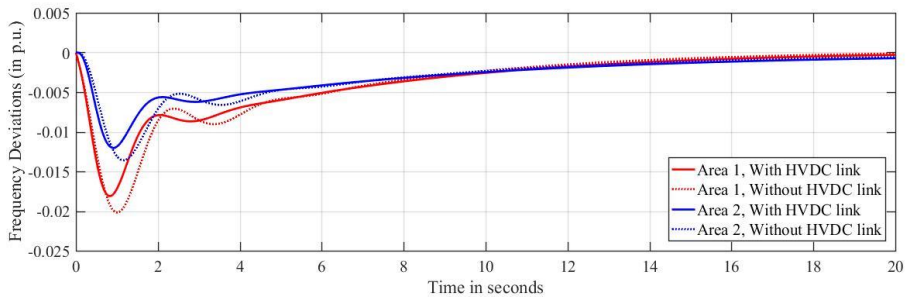

Fig. 4 Change in Frequency - Δf_1 and Δf_2

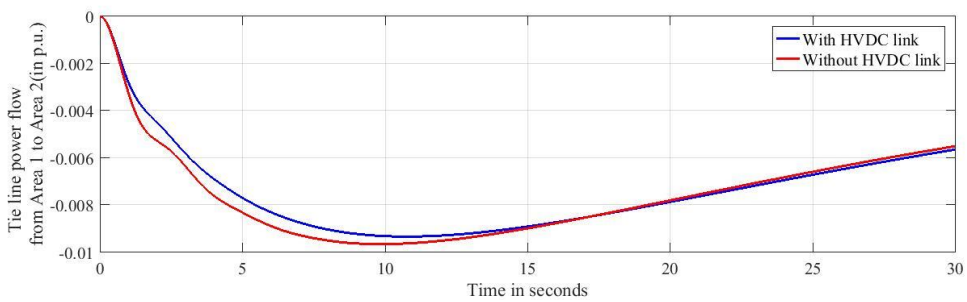

Fig. 5 Change in Tie Line Power Flow - ΔP_{TIE}

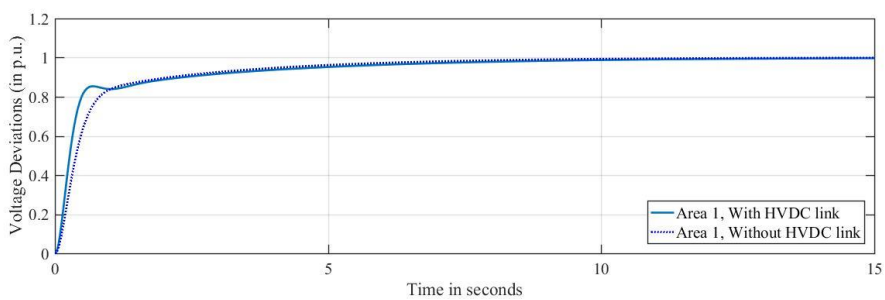

Fig. 6 Change in Voltage - ΔV_1

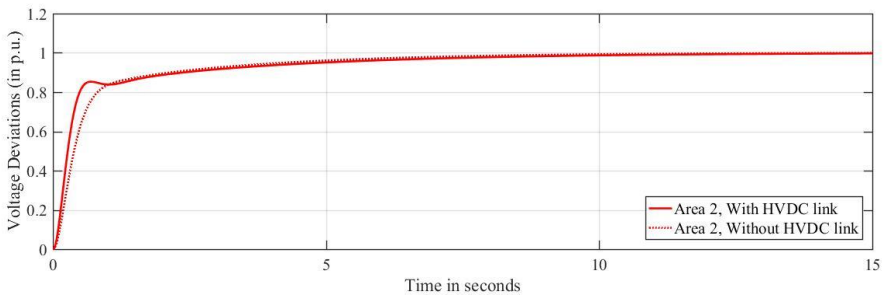

Fig. 7 Change in Voltage - ΔV_2

Table -1: PID controller gains observed for LFC and AVR loops

PID controller gains	Area 1	Area 2
Controller gains for LFC loop	$K_P = 1$	$K_P = 1$
	$K_I = 0.25$	$K_I = 0.25$
	$K_D = 0.3$	$K_D = 0.3$
Controller gains for AVR loop	$K_P = 1$	$K_P = 1$
	$K_I = 0.25$	$K_I = 0.25$
	$K_D = 0.3$	$K_D = 0.3$

Table -2: Simulation Parameters for the closed loop control system

Quantity	Area 1	Area 2
Simulation Parameters for LFC Control Loop:-		
Base Power	1000MW	1000MW
Governor time constant	$\tau_{g1} = 0.2$ sec	$\tau_{g2} = 0.2$ sec
Turbine time constant	$\tau_{t1} = 0.5$ sec	$\tau_{t2} = 0.5$ sec
Load damping constant	$D_1 = 0.8$	$D_2 = 0.8$
Generator inertia constant	$H_1 = 5$ MW/MVA	$H_2 = 5$ MW/MVA
Governor speed regulation	$R_1 =$ 0.05 Hz/p.u.	$R_2 =$ 0.05 Hz/p.u.
Frequency bias factor	$B_1 =$ 20.8 p.u. MW/Hz	$B_2 =$ 20.8 p.u. MW/Hz
Tie line synchronizing coefficient	$T_{12} = 0.0867$ p.u	-
HVDC link time constant	0.2 sec	0.2 sec
HVDC link gain	1	1
Simulation Parameters for AVR Control Loop:-		
Amplifier transfer function block	$K_{A1} = 10$, $\tau_{A1} = 0.1$ sec	$K_{A2} = 10$, $\tau_{A2} = 0.1$ sec
Exciter transfer function block	$K_{E1} = 1$, $\tau_{E1} = 0.4$ sec	$K_{E2} = 1$, $\tau_{E2} = 0.4$ sec
Generator transfer function block	$K_{G1} = 0.8$, $\tau_{G1} = 1.4$ sec	$K_{G2} = 0.8$, $\tau_{G2} = 1.4$ sec
Sensor transfer function block	$K_{R1} = 1$, $\tau_{R1} = 0.05$ sec	$K_{R2} = 1$, $\tau_{R2} = 0.05$ sec

3. CONCLUSIONS

Dynamic response of the system was observed for a 0.1875 p.u. step load change. With the use of PID controller in both HVDC link and non HVDC link power system, there is reduced overshoot and settling time. The typical characteristics show relatively smaller peak overshoot and lesser settling time with the use of HVDC link for power flow. It can be concluded that with

use of HVDC links in a power system, the system security and tie line deviations can be maintained.

REFERENCES

1. D. P. Kothari and I. J. Nagrath, "Automatic generation and voltage control," in *Power System Engineering*, 2nd ed., New Delhi, India: Tata McGraw Hill, 2011, pp. 409-430.
2. N. G. Hingorani and L. Gyugyi, "FACTS Concept and General System Consideration" in *Understanding FACTS*, New Delhi: IEEE Press, 2001, pp. 1-3.
3. Y. Arya, N. Kumar and H.D. Mathur, "Automatic Generation Control in Multi Area Interconnected Power System by using HVDC links," *Int. J. of Power Electronics and Drive System*, vol. 2, no. 1, pp.67-75, March 2012.
4. A. Chakrabarti and S. Halder, "Automatic Generation Control," in *Power System Analysis-Operation & Control*, New Delhi, India: Prentice Hall India, 2010, pp. 469-506.
5. H. Saadat, "Power System Control," in *Power System Analysis*, New Delhi, India: Tata McGraw Hill, 2002, pp. 527-569.
6. D. Apostolopoulou, P.W. Sauer and A.D. Dominguez-Garcia, 2014. "Automatic Generation Control and its Implementation in Real Time", IEEE, pp. 2444-2453, 2014.
7. K. H. Ang, G. Chong and Y. Li, "PID control system analysis, design and technology," *IEEE Trans. on Control Syst. Technology*, vol. 13, no. 4, pp. 559-576, July, 2005.
8. M. Nagendra, and M. S. Krishnarayalu, "PID controller tuning using simulink for multi area power systems," *Int. J. of Eng. Research & Technology*, vol. 1, no. 7, pp. 1-9, September, 2012.
9. P. Dabur, N. K. Yadav and V. K. Tayal, "Matlab design and simulation of AGC and AVR for multi area power system and demand side management," *Int. J. of Comput. and Elect. Eng.*, vol. 3, no. 2, pp. 259-264, April, 2011.
10. S. Singh and J. Kaur, "Fuzzy Logic Based Optimal Generation Control of A Two Area Interconnected Power System with a Parallel HVDC Link," *Int. J. of Advance Engineering and Research Development*, vol. 1, no. 5, pp. 1-7, May 2014.